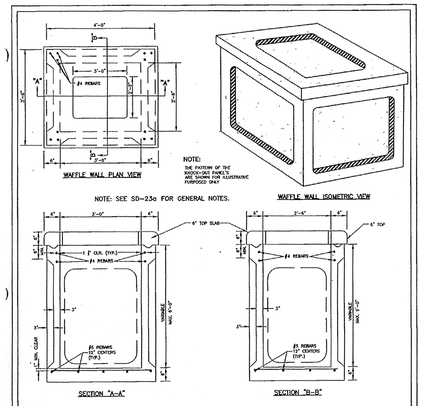

PRECAST DRAINAGE WAFFLE STRUCTURE
SD 2-23

DATE: 2001	STANDARD DETAIL	CITY OF WILMINGTON ENGINEERING OFFICE 305 CHESTNUT STREET P.O. BOX 1810 WILMINGTON N.C. 28402 (910) 341-7807
DRAWN BY JSR/CMR	PRECAST WAFFLE DRAINAGE STRUCTURE	
CHECKED BY B.P., P.E.		
SCALE NOT TO SCALE		SD 2-23

5 - 105

GENERAL NOTES:

- USE 4000 PSI CONCRETE, PROVIDE FOR H-20 TRAFFIC LOADING.
- PROVIDE ALL REINFORCING STEEL WHICH MEETS ASTM A615 FOR GRADE 60 AND WELDED WIRE FAVRIC CONFORMING TO ASTM A185.
- LIMIT MAXIMUM DEPTH TO TOP OF BOTTOM SLAB FOR WAFFLE WALL STRUCTURE TO 6'-0".
- PLACE LIFT HOLES OR PINS IN ACCORDANCE WITH OSHA STANDARD 1926.704
- SAW CUT, CORE DRILL ORFORM OPENINGS, FOR PIPE TO PROVIDE REQUIRED SIZE AND LOCATION. ORIENT WAFFLE WALL STRUCTURES SO THAT PIPES ENTER THROUGH THE KNOCKOUT/WAFFLE PANELS ONLY. SEAL OPENINGS WITH HYDRAULIC CEMENT.
- ALL ELEMENTS PRECAST TO MEET ASTM C913.
- SET ON 6" WASHED STONE
- FRAME AND GRATE HEIGHT MAY BE ADJUSTED WITH BRICK.
- PROVIDE PRECAST STURCTURES OVER 4'-0" IN DEPTH WITH STEPS/LADDER INSTALLED IN ACCORDANCE WITH ASHA STANDARD 1910.27 AND AS FIELD CONDITIONS DICTATE.
- WELDED WIRE FABRIC MAY BE SUBSTITUTED FOR REBAR AS LONG AS THE SAME AREA OF STEEL IS PROVIDED,
- SEAL JOINTS WITH A FLEXIBLE BUTYL RUBBER BASE CONFORMING TO FEDERAL SPECIFICATION SS-S-21A, AASHTO M-19B, TYPE B - BUTYL RUBBER.
- LIMIT MAXIMUM STRUCTURE SIZE TO INSIDE CLEAR DEMENSIONS OF 2'- 6" x 3' - 0".
- USE FRAME AND GRATE AS PER SD-19.
- GROUT INVERT TO PROVIDE SMOOTH FLOW

DATE: 2001	STANDARD DETAIL	CITY OF WILMINGTON ENGINEERING OFFICE 305 CHESTNUT STREET P.O. BOX 1810 WILMINGTON N.C. 28402 (910) 341-7807
DRAWN BY JSR/CMR	PRECAST WAFFLE DRAINAGE STRUCTURE GENERAL NOTES	
CHECKED BY B.P., P.E.		
SCALE NOT TO SCALE		SD 2-23a

5 - 106

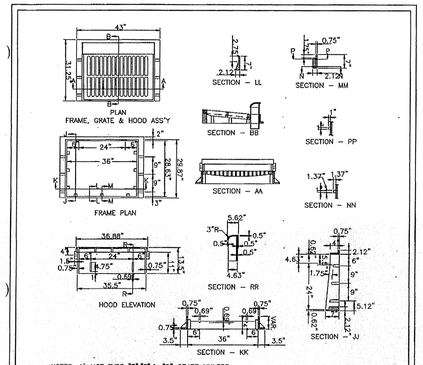

NOTES: 1) USE TYPE "E","F",& "G" GRATE UNLESS OTHERWISE INDICATED
2) TOP OF HOOD CASTING SHALL HAVE RAISED LETTERS WHICH SAY: "KEEP STORM DRAIN CLEAN! DRAINS TO CREEK". PROVIDE PICTURE OF FISH BETWEEN TWO STATEMENTS.

CATCH BASIN CASTING FOR
30" HOOD AND GRATE
SD 2-19

DATE: 2001	STANDARD DETAIL	CITY OF WILMINGTON ENGINEERING OFFICE 305 CHESTNUT STREET P.O. BOX 1810 WILMINGTON N.C. 28402 (910) 341-7807
DRAWN BY JSR/CMR	CATCH BASIN CASTING FOR 30" HOOD AND GRATE	
CHECKED BY B.P., P.E.		
SCALE NOT TO SCALE		SD 2-19

5-81

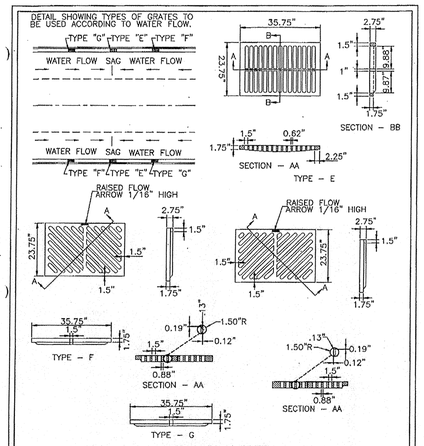

CATCH BASIN GRATE
FOR 30" HOOD AND GRATE
SD 2-20

DATE: 2003	STANDARD DETAIL	CITY OF WILMINGTON ENGINEERING OFFICE 305 CHESTNUT STREET P.O. BOX 1810 WILMINGTON N.C. 28402 (910) 341-7807
DRAWN BY JSR/CMR	CATCH BASIN GRATE FOR 30" HOOD AND GRATE	
CHECKED BY B.P., P.E.		
SCALE NOT TO SCALE		SD 2-20

5-82

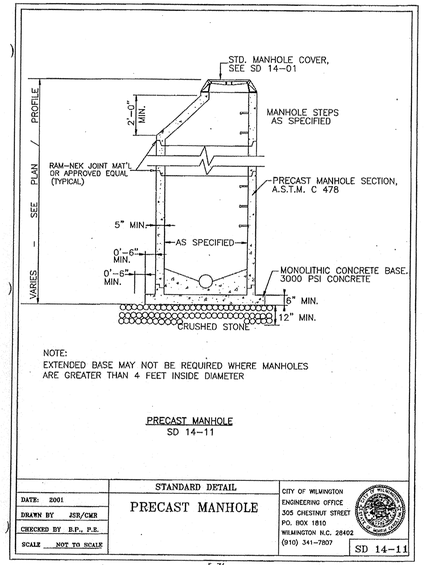

NOTE:
EXTENDED BASE MAY NOT BE REQUIRED WHERE MANHOLES ARE GREATER THAN 4 FEET INSIDE DIAMETER

PRECAST MANHOLE
SD 14-11

DATE: 2001	STANDARD DETAIL	CITY OF WILMINGTON ENGINEERING OFFICE 305 CHESTNUT STREET P.O. BOX 1810 WILMINGTON N.C. 28402 (910) 341-7807
DRAWN BY JSR/CMR	PRECAST MANHOLE	
CHECKED BY B.P., P.E.		
SCALE NOT TO SCALE		SD 14-11

5-74

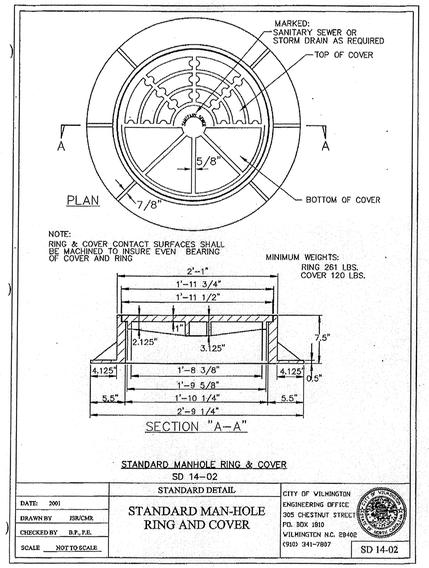

STANDARD MANHOLE RING & COVER
SD 14-02

DATE: 2001	STANDARD DETAIL	CITY OF WILMINGTON ENGINEERING OFFICE 305 CHESTNUT STREET P.O. BOX 1810 WILMINGTON N.C. 28402 (910) 341-7807
DRAWN BY JSR/CMR	STANDARD MAN-HOLE RING AND COVER	
CHECKED BY B.P., P.E.		
SCALE NOT TO SCALE		SD 14-02

5-78

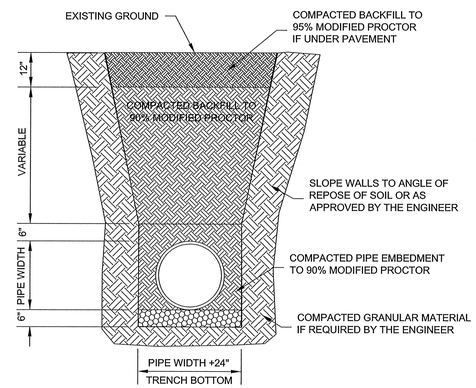

STANDARD PIPE TRENCH DETAIL
SD 1-07
NOT TO SCALE

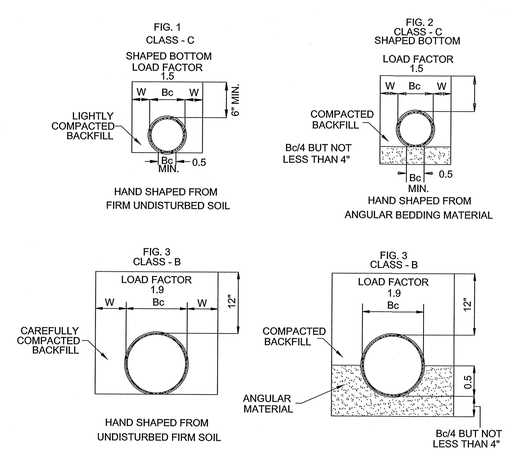

GUIDELINES FOR BEDDING DETAILS, STORM SEWER CLASSES (B & C)
SD 2-17
NOT TO SCALE

For each open utility cut of City streets, a $325 permit shall be required from the City prior to occupancy and/or project acceptance.

Approved Construction Plan

	Name	Date
Planning		
Traffic		
Fire		

CITY OF WILMINGTON NORTH CAROLINA
Public Services • Engineering Division
APPROVED STORMWATER MANAGEMENT PLAN
Date:_____ Permit #_____
Signed: _____

NCDENR PWSS WATER PERMIT #: _____
WATER CAPACITY: _____GPD
DWQ SEWER PERMIT #: _____
SEWER CAPACITY: _____GPD
SEWER SHED # AND PLANT: _____
SEWER TO FLOW THROUGH NEI: YES or NO (CIRCLE ONE)

FINAL DESIGN - NOT RELEASED FOR CONSTRUCTION

REVISIONS:
12/18/14 PER CITY STORMWATER COMMENTS

CLIENT INFORMATION:

LOT 2 DEVELOPMENT
1015 ASHES DR., SUITE 202
WILMINGTON, NC 28405

PARAMOUNTE ENGINEERING
WILMINGTON, NC FAYETTEVILLE, NC
5911 Oleander Drive, Suite 201
Wilmington, North Carolina 28403
(910) 791-6707 (O) (910) 791-6760 (F)
NC License #: C-2846

DETAILS

MELTON OAKS SUBDIVISION
WILMINGTON
NORTH CAROLINA

PROJECT STATUS:
CONSEPTUAL LAYOUT:
PRELIMINARY LAYOUT:
FINAL DESIGN:
RELEASED FOR CONST:

DRAWING INFORMATION
DATE: 10/3/14
SCALE:
DESIGNED: GLM
DRAWN: GLM
CHECKED: DPB

SEAL
NORTH CAROLINA PROFESSIONAL SEAL 16729 ENGINEER DAVID B. BOWMAN

C-5.1

PEI JOB#: 14149.PE