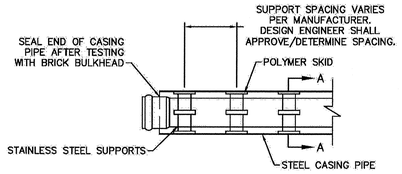

PLAN

NOTE: PIPE SUPPORT TO BE PLACED TO PROVIDE PROPER SUPPORT, ALIGNMENT, AND GRADE AS SPECIFIED. CONTINUOUS SUPPORTS MAY BE USED AS ALTERNATIVE. OIL, GREASE, OR PETROLEUM PRODUCT MAY NOT BE USED AS LUBRICANT.

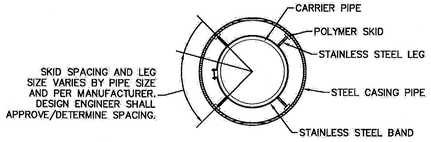

SECTION A-A

PIPE CASING SUPPORT DETAIL

NOT TO SCALE

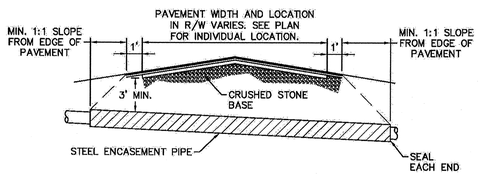

NOTES:
1. CASING WILL BE INSTALLED AT LINE AND GRADE SHOWN ON INDIVIDUAL PROFILE FOR EACH CROSSING. BORING/JACKING TO LINE AND GRADE IS REQUIRED.
2. TRACER WIRE SHALL BE CONTINUED THROUGH CASING.

TYPICAL BORING/ JACKING DETAIL

NOT TO SCALE

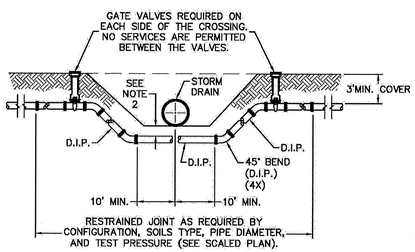

NOTES:
1. USE PRESSURE CLASS 350 DIP, UNLESS SPECIFIED OTHERWISE.
2. MINIMUM DEPTH REQUIRED, UNLESS SPECIFIED OTHERWISE BY CFPUA:
   a. IN DOT R/W, 36" MIN. TYPICAL, OR 24" MIN. WHEN CROSSING A DITCH LINE.
   b. ALL OTHER LOCATIONS, 30" MIN.
   c. WHEN STORM DRAIN INVERT IS BURIED AT OR BELOW ABOVE DEPTHS, 18" MIN. CLEARANCE IS REQUIRED.

WATER MAIN DITCH AND STORM DRAIN CROSSING

NOT TO SCALE

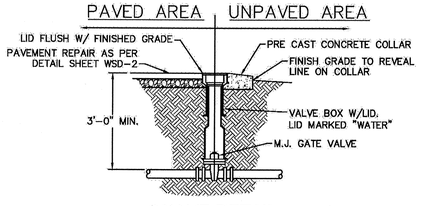

VALVE DETAIL

NOT TO SCALE

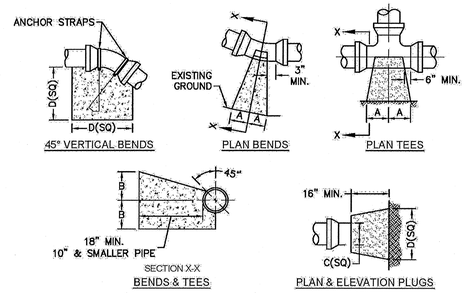

SIZE	90 BENDS		45 BENDS		22 1/2 BENDS		TEES/PLUGS		45 VERT. BENDS
	A	B	A	B	A	B	A	B	
3"	8"	6"	5"	6"	3"	7"	6"	8"	27"
4"	8"	9"	5"	8"	3"	11"	6"	9"	28"
6"	14"	11"	9"	9"	8"	8"	12"	9"	36"
8"	16"	16"	12"	12"	10"	13"	14"	13"	42"
10"	18"	22"	15"	14"	14"	16"	18"	15"	50"
12"	20"	28"	18"	17"	16"	16"	22"	18"	62"
14"	26"	29"	21"	19"	18"	18"	26"	20"	72"
16"	33"	29"	25"	21"	20"	21"	32"	21"	83"
18"	40"	30"	28"	24"	22"	23"	36"	24"	88"

NOTES:
1. BASED ON 160 PSI TEST PRESSURE AND 2000 PSF SOIL BEARING CAPACITY.
2. ALL BEARING SURFACES TO BE CARRIED TO UNDISTURBED GROUND.
3. USE MEG-A-LUG (PREFERRED) IN LIEU OF BLOCKING AND RODDING.

THRUST BLOCK DETAIL

NOT TO SCALE

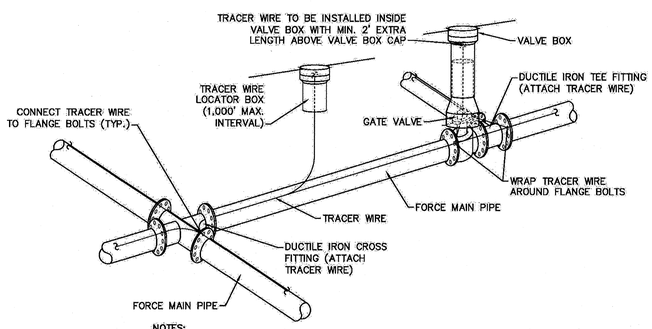

NOTES:
1. TRACER WIRE SHALL BE #10 COPPER SOLID CORE COPPER WIRE WITH GAS AND OIL RESISTANT INSULATION
2. WIRE SHALL BE STRAPPED TO ALL PVC FORCE MAIN PIPING WITH DUCT TAPE AT 12-FT. INTERVALS.
3. SECURE WIRE TO ALL TEE AND CROSS FITTINGS.
4. ALL WIRE SPLICES SHALL HAVE WATER PROOF WIRE CONNECTIONS.

TRACER WIRE DETAIL

NOT TO SCALE

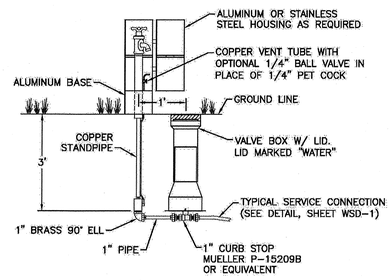

SAMPLING STATION

NOT TO SCALE

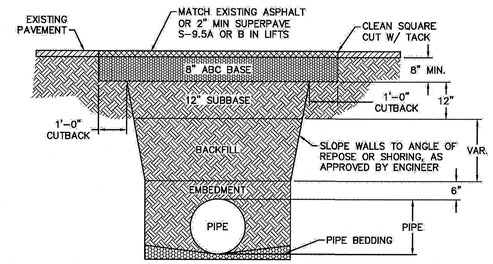

NOTES:
1. BACKFILL SHALL BE SUITABLE MATERIAL THAT IS FREE FROM HEAVY CLAY, GUMBOS, DEBRIS, ORGANICS AND LITTLE TO NO EXCESSIVE MOISTURE.
2. SELECT BACKFILL MAY BE SUBSTITUTED OR REQUIRED BY CITY TO ACHIEVE COMPACTION, (I.E. #57, ABC, CRUSHED LIMESTONE, CLEAN SAND, FLOWABLE FILL, ETC).
3. 8-INCH OF ABC BASE MATERIAL SHALL BE USED ON CITY STREETS.
4. BACKFILL AND BASE MATERIALS SHALL BE COMPACTED 12" MINIMUM LIFTS
5. SOIL SHALL BE COMPACTED BY A MECHANIZED TAMPER (I.E JUMPING JACK), HOWEVER, VIBRATORY ROLLERS > 18" WIDTH MAY BE USED FOR LARGER EXCAVATIONS. THE PLATE TAMP METHOD SHALL NOT BE USED.
6. ALL APPROVED CASTINGS SHALL BE SET FLUSH TO GRADE AND SUPPORTED IF APPLICABLE.
7. ABC BASE AND SUBBASE COMPACTED TO 98% AND BACKFILL AND EMBEDMENT COMPACTED TO 90% AS DETERMINED BY THE MODIFIED PROCTOR AASHTO METHOD T-99.
8. 1-FOOT CUTBACKS OF ASPHALT SHALL BE PREPARED ON UNDISTURBED SOIL. MINIMUM ASPHALT DENSITY IS 90%.

(FOR PRIVATE ROADS AND PAVED AREAS; CONTRACTOR TO MEET MIN. REQUIREMENTS AS DEFINED BY RIGHT-OF-WAY OWNER FOR PUBLIC ROAD REPAIRS)

PAVEMENT REPAIR WHERE PIPE INSTALLED

NOT TO SCALE

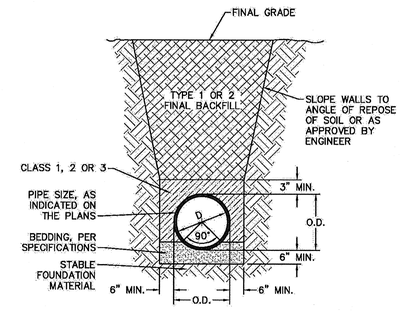

TYPICAL TRENCH DETAIL

NOT TO SCALE

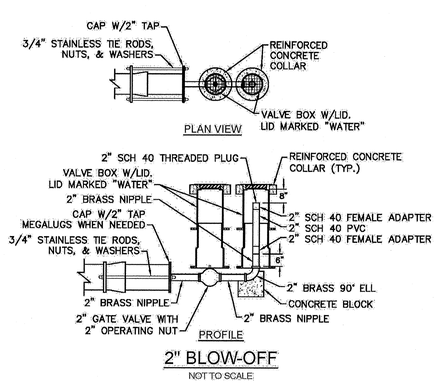

2" BLOW-OFF

NOT TO SCALE

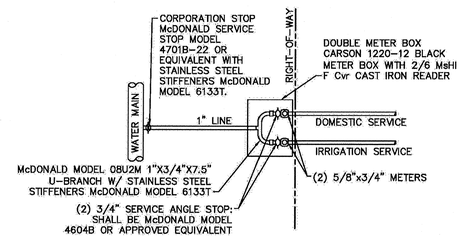

ONE DOMESTIC SERVICE PER TAP

DOUBLE SERVICE CONNECTION

NOT TO SCALE

GENERAL NOTES:
1. NO EXCAVATED MATERIAL SHALL BE PLACED IN ANY STREAM, DITCH OR DRAINAGE-WAY.
2. THE CONTRACTOR IS RESPONSIBLE FOR LOCATING ALL UNDERGROUND UTILITIES BEFORE ANY CONSTRUCTION BEGINS.
3. THE CONTRACTOR IS RESPONSIBLE FOR TEMPORARY SEDIMENT AND EROSION CONTROL MEASURES WHILE CONSTRUCTION IS IN PROGRESS.
4. THE CONTRACTOR IS RESPONSIBLE FOR STABILIZATION OF ALL DISTURBED AREAS.
5. THE CONTRACTOR IS RESPONSIBLE FOR LAY DOWN AND STOCKPILE AREAS (TO ARRANGE AND ENSURE COMPLIANCE WITH ALL LOCAL AND STATE REGULATIONS).

THE DETAILS SHOWN HEREON SUPERCEDE CFPUA WRITTEN TECHNICAL SPECIFICATIONS VERSIONS 1.00 - 1.04

REV:	DESCRIPTION:	DATE:
1	Revised Water Main Ditch and Storm Crossing Detail	11/12/13
2	Revised Water Main Ditch and Storm Crossing Detail	05/05/14

CFPUA WATER DISTRIBUTION SYSTEM

STANDARD DETAILS

CAPE FEAR PUBLIC UTILITY AUTHORITY
235 GOVERNMENT CENTER DRIVE
WILMINGTON, NC 28403
OFFICE: (910)332-6560
Stewardship. Sustainability. Service.

DATE: 1/9/12
SCALE: N/A
DRAWN BY: CFPUA
CHECKED BY: CFPUA
PROJECT NO.:

SHEET NO: WSD-2

FINAL DESIGN - NOT RELEASED FOR CONSTRUCTION

REVISIONS:

CLIENT INFORMATION:

LOT 2 DEVELOPMENT
1015 ASHES DR., SUITE 202
WILMINGTON, NC 28405

PARAMOUNTE ENGINEERING
WILMINGTON, NC · FAYETTEVILLE, NC
5911 Oleander Drive, Suite 201
Wilmington, North Carolina 28403
(910) 791-9707 (O) (910) 791-0760 (F)
NC License #: C-2846

DETAILS

MELTON OAKS SUBDIVISION
WILMINGTON
NORTH CAROLINA

PROJECT STATUS
CONCEPTUAL LAYOUT:
PRELIMINARY LAYOUT:
FINAL DESIGN:
RELEASED FOR CONST:

DRAWING INFORMATION
DATE: 8/21/14
SCALE: N/A
DESIGNED: GLM
DRAWN: GLM
CHECKED: RPB

SEAL
NORTH CAROLINA PROFESSIONAL SEAL 16729 ENGINEER DAVID B. BOWMAN

C-5.5

PEI JOB#: 14149.PE