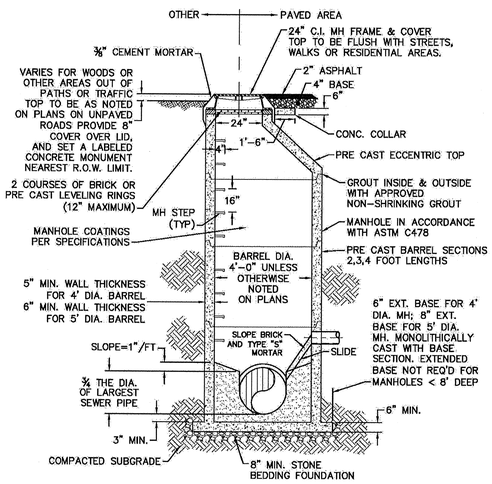

PRECAST CONCRETE OFFSET MANHOLE TYPICAL

(LESS THAN 30" DROP)

NOT TO SCALE

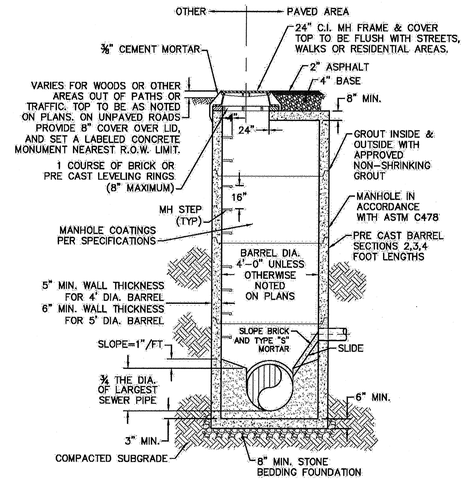

PRECAST CONCRETE FLAT TOP MANHOLE TYPICAL

(LESS THAN 30" DROP)

NOT TO SCALE

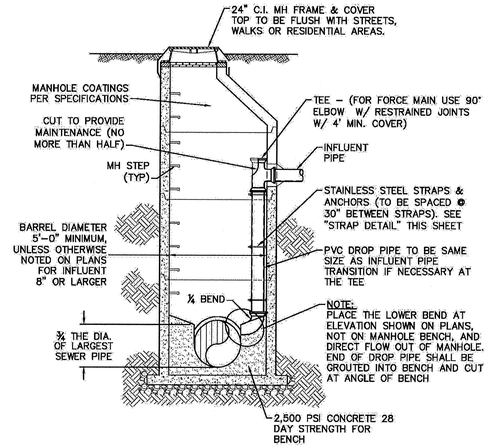

DROP MANHOLE

(MORE THAN 30" DROP)

NOT TO SCALE

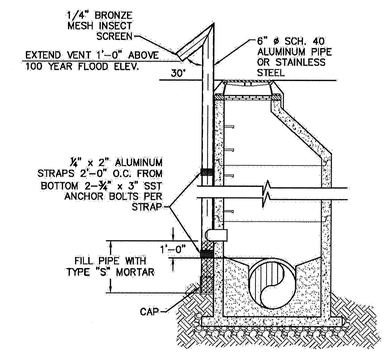

STANDARD VENT MANHOLE

NOT TO SCALE

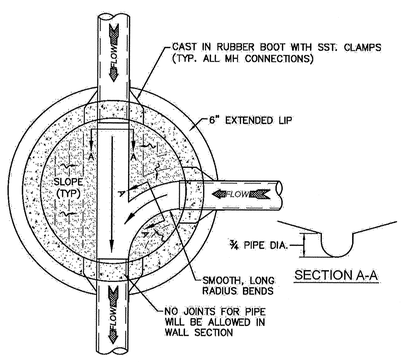

MANHOLE FLOOR PLAN

NOT TO SCALE

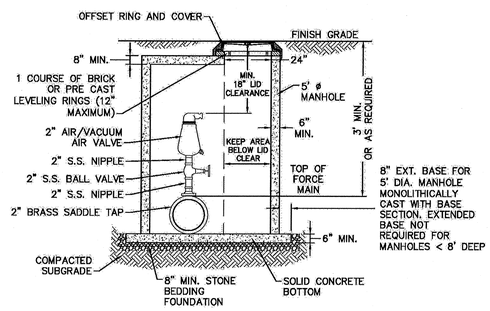

NOTES:
1. CONTRACTOR TO INSTALL VALVE AND MANHOLE AT SUFFICIENT DEPTH TO ALLOW FOR ACCESS.
2. FORCE MAIN TO BE OFFSET IN MANHOLE TO KEEP AREA BELOW LID CLEAR.
3. REFER TO SPECIFICATIONS FOR ADDITIONAL DETAILS.
4. USE CAST IN RUBBER BOOT WITH SST. CLAMPS FOR ALL MH CONNECTIONS, INCLUDING FORCE MAIN.

AIR/ VACUUM AND AIR RELEASE COMBINATION VALVE

NOT TO SCALE

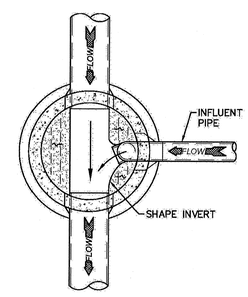

DROP MANHOLE FLOOR PLAN

NOT TO SCALE

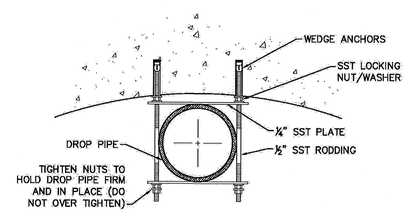

NOTE: ALL PARTS TO BE SST.

STRAP DETAIL

NOT TO SCALE

CAPE FEAR PUBLIC UTILITY AUTHORITY STANDARD SEWER NOTES:

1. SEWER GUARDS REQUIRED AT ALL MANHOLES. STAINLESS STEEL SEWER GUARDS REQUIRED AT MANHOLES LOCATED IN TRAFFIC AREAS.
2. SERVICES SHALL BE PERPENDICULAR TO MAIN AND TERMINATE AT RIGHT-OF-WAY LINE. SERVICES IN CUL-DE-SACS ARE REQUIRED TO BE PERPENDICULAR, OR MUST ORIGINATE IN MANHOLE AND TERMINATE AT RIGHT-OF-WAY LINE.
3. ALL SERVICES TYING INTO DUCTILE IRON MAINS SHALL BE CONSTRUCTED OF CLASS 50, DIP, WITH PROTECTO 401 CERAMIC EPOXY LINING.
4. MINIMUM 10' UTILITIES EASEMENT PROVIDED ALONG THE FRONTAGE OF ALL LOTS AND AS SHOWN FOR NEW DEVELOPMENTS.
5. NO FLEXIBLE COUPLINGS SHALL BE USED.
6. ALL STAINLESS STEEL FASTENERS SHALL BE 316.

STANDARD SEWER NOTES

(REQUIRED ON ALL SEWER PLAN AND PROFILE SHEETS)

GENERAL NOTES:
1. NO EXCAVATED MATERIAL SHALL BE PLACED IN ANY STREAM, DITCH OR DRAINAGE-WAY.
2. THE CONTRACTOR IS RESPONSIBLE FOR LOCATING ALL UNDERGROUND UTILITIES BEFORE ANY CONSTRUCTION BEGINS.
3. THE CONTRACTOR IS RESPONSIBLE FOR TEMPORARY SEDIMENT AND EROSION CONTROL MEASURES WHILE CONSTRUCTION IS IN PROGRESS.
4. THE CONTRACTOR IS RESPONSIBLE FOR STABILIZATION OF ALL DISTURBED AREAS.
5. THE CONTRACTOR IS RESPONSIBLE FOR LAY DOWN AND STOCKPILE AREAS (TO ARRANGE AND ENSURE COMPLIANCE WITH ALL LOCAL AND STATE REGULATIONS).

THE DETAILS SHOWN HEREON SUPERCEDE CFPUA WRITTEN TECHNICAL SPECIFICATIONS VERSIONS 1.00 - 1.04

REV:	DESCRIPTION:	DATE:
1	AIR / VACUUM AND AIR RELEASE COMBINATION VALVE REVISED	10/26/12
2	STANDARD SEWER NOTE #6 REVISED	12/10/12

CFPUA SANITARY SEWER

STANDARD DETAILS

CAPE FEAR PUBLIC UTILITY AUTHORITY
235 GOVERNMENT CENTER DRIVE
WILMINGTON, NC 28403
OFFICE: (910)332-6560
Stewardship. Sustainability. Service.

DATE:	1/9/12
SCALE:	N/A
DRAWN BY:	CFPUA
CHECKED BY:	CFPUA
PROJECT NO.:	

SHEET NO: SSD-1

FINAL DESIGN - NOT RELEASED FOR CONSTRUCTION

REVISIONS:

CLIENT INFORMATION:

LOT 2 DEVELOPMENT
1015 ASHES DR., SUITE 202
WILMINGTON, NC 28405

PARAMOUNTE
ENGINEERING
WILMINGTON, NC FAYETTEVILLE, NC
5911 Oleander Drive, Suite 201
Wilmington, North Carolina 28403
(910) 791-6707 (O) (910) 791-6760 (F)
NC License #: C-2846

DETAILS

MELTON OAKS SUBDIVISION
WILMINGTON
NORTH CAROLINA

PROJECT STATUS
CONCEPTUAL LAYOUT:
PRELIMINARY LAYOUT:
FINAL DESIGN:
RELEASED FOR CONST:

DRAWING INFORMATION

DATE:	9/27/14
SCALE:	N/A
DESIGNED:	GLM
DRAWN:	GLM
CHECKED:	RPB

SEAL: NORTH CAROLINA PROFESSIONAL SEAL 16729 ENGINEER DAVID B. BOWMAN

C-5.6

PEI JOB#: 14149.PE